OB-U Type Ultra Low Phase Noise
2.5 x 2.0 mm SMD Differential Output Crystal Oscillator

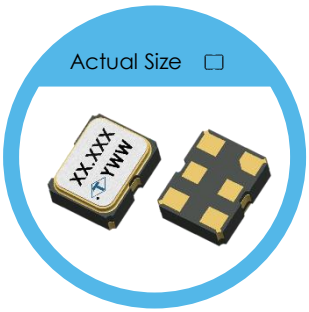

RoHS Compliant

FEATURES

- Industry Standard 2.5 x 2.0 x 0.92mm Hermetically Sealed Ceramic Package
- Ultra Low Jitter Performance: Typical 50fs RMS from 12kHz - 20MHz
- Differential Output Level: LVPECL, LVDS and HCSL
- Operation Supply Voltage: 1.8V, 2.5V and 3.3V
- Pb-free/RoHS Compliant

TYPICAL APPLICATION

- 40Gbit/100Gbit Ethernet, MAN, SONET, Fiber Channel
- Test Instrumentation

DIMENSION (mm)

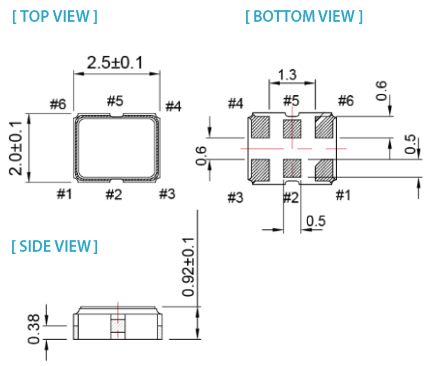

SOLDER PAD LAYOUT (mm)

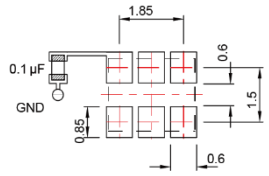

To ensure optimal oscillator performance, place a by-pass capacitor of 0.1µF as close to the part as possible between V_{DD} and GND pads.

PIN FUNCTION (mm)

PIN#	FUNCTION
1	NC/Tri-State
2	Tri-State/NC
3	GND
4	Output
5	Comp. Output
6	V_{DD}

ELECTRICAL SPECIFICATION

Parameter		LVPECL 3.3V Min.	LVPECL 3.3V Max.	LVPECL 2.5V Min.	LVPECL 2.5V Max.	Unit	Test Condition
Supply Voltage Variation (V_{DD})		V_{DD} – 10%	V_{DD} + 10%	V_{DD} – 5%	V_{DD} + 5%	V	
Frequency Range		100	220	100	220	MHz	
Standard Frequency		100, 125, 156.25				MHz	Standard frequencies are frequencies which the crystal has been designed and does not imply a stock position.
Power Current Consumption			65		65	mA	
Output Level	Output High	2.215	2.42	1.415	1.64	V	
	Output Low	1.49	1.68	0.69	0.88	V	
Transition Time	Rise Time		0.4		0.4	nSec	Transition times are measured between 20% and 80%
	Fall Time		0.4		0.4	nSec	
Duty Cycle		45	55	45	55	%	
Startup Time			5		5	mSec	
Tri-State	Enable	0.7 x V_{DD}		0.7 x V_{DD}		V	
	Disable		0.3 x V_{DD}		0.3 x V_{DD}	V	
Stand by Current			30		30	µA	
Output Loading		50Ω, V_{DD} – 2V					
RMS Phase Jitter Integrated 12 kHz~20 MHz @156.25MHz			0.1		0.1	pSec	
Aging (@ 25°C, First Year)			±3		±3	ppm	
Storage Temp. Range		-55	125	-55	125	°C	
Phase Noise		Typ.	Max.	Typ.	Max.		
At V_{DD}=3.3V, fout=156.25MHz	10kHz offset	-150		-150		dBc/Hz	
	100kHz offset	-155		-155		dBc/Hz	
	1MHz offset	-160		-160		dBc/Hz	

Note: not all combination of options are available. Other specifications may be available upon request.

Specifications subject to change without notice.

www.taitien.com
sales@taitien.com.tw

Parameter		LVDS						Unit	Test Condition
		3.3V		2.5V		1.8V			
		Min.	Max.	Min.	Max.	Min.	Max.		
Supply Voltage Variation (V_{DD})		V_{DD} – 10%	V_{DD} + 10%	V_{DD} – 5%	V_{DD} + 5%	V_{DD} – 5%	V_{DD} + 5%	V	
Frequency Range		100	175	100	175	100	175	MHz	
Standard Frequency		100, 125, 156.25						MHz	Standard frequencies are frequencies which the crystal has been designed and does not imply a stock position.
Power Current Consumption			35		35		25	mA	
Output Level	Differential Output (V_{OD}, OUT-OUTN)	0.24	0.45	0.24	0.45	0.24	0.45	V	
	Output High		1.6		1.6		1.6	V	
	Output Low	0.9		0.9		0.9		V	
Transition Time	Rise Time		0.3		0.3		0.4	nSec	Transition times are measured between 20% and 80%
	Fall Time		0.3		0.3		0.4	nSec	
Duty Cycle		45	55	45	55	45	55	%	
Startup Time			5		5		5	mSec	
Tri-State	Enable	0.7 x V_{DD}		0.7 x V_{DD}		0.7 x V_{DD}		V	
	Disable		0.3 x V_{DD}		0.3 x V_{DD}		0.3 x V_{DD}	V	
Stand by Current			30		30		30	μA	
Output Loading		100Ω (Between OUT & OUTN)						Ω	
RMS Phase Jitter Integrated 12 kHz~20 MHz @ 156.25MHz			0.1		0.1		0.1	pSec	
Aging (@ 25°C, First Year)			±3		±3		±3	ppm	
Storage Temp. Range		-55	125	-55	125	-55	125	°C	
Phase Noise		Typ.	Max.	Typ.	Max.	Typ.	Max.		
At V_{DD}=3.3V, fout=156.25MHz	10kHz offset	-150		-150		-150		dBc/Hz	
	100kHz offset	-155		-155		-155		dBc/Hz	
	1MHz offset	-160		-160		-160		dBc/Hz	

Parameter		HCSL						Unit	Test Condition
		3.3V		2.5V		1.8V			
		Min.	Max.	Min.	Max.	Min.	Max.		
Supply Voltage Variation (V_{DD})		V_{DD} – 10%	V_{DD} + 10%	V_{DD} – 5%	V_{DD} + 5%	V_{DD} – 5%	V_{DD} + 5%	V	
Frequency Range		100	135	100	135	100	135	MHz	
Standard Frequency		100, 125, 156.25						MHz	Standard frequencies are frequencies which the crystal has been designed and does not imply a stock position.
Power Current Consumption			46		46		46	mA	
Output Level	Output High	0.6	0.9	0.6	0.9	0.5	1.0	V	
	Output Low	-0.15	0.15	-0.15	0.15	-0.15	0.15	V	
Transition Time	Rise Time		0.6		0.6		0.6	nSec	Transition times are measured between 20% and 80%
	Fall Time		0.6		0.6		0.6	nSec	
Duty Cycle		45	55	45	55	45	55	%	
Startup Time			5		5		5	mSec	
Tri-State	Enable	0.7 x V_{DD}		0.7 x V_{DD}		0.7 x V_{DD}		V	
	Disable		0.3 x V_{DD}		0.3 x V_{DD}		0.3 x V_{DD}	V	
Stand by Current			30		30		30	μA	
Output Loading		50 to GND						Ω	
RMS Phase Jitter Integrated 12 kHz~20 MHz @ 156.25MHz			0.1		0.1		0.1	pSec	
Aging (@ 25°C, First Year)			±3		±3		±3	ppm	
Storage Temp. Range		-55	125	-55	125	-55	125	°C	
Phase Noise		Typ.	Max.	Typ.	Max.	Typ.	Max.		
At V_{DD}=3.3V, fout=156.25MHz	10kHz offset	-150		-150		-150		dBc/Hz	
	100kHz offset	-155		-155		-155		dBc/Hz	
	1MHz offset	-160		-160		-160		dBc/Hz	

FREQ. STABILITY vs. TEMP. RANGE

Temp.(°C) \ ppm	±20	±25	±50
-20 ~ +70	○	○	○
-40 ~ +85	△	○	○
-40 ~ +105	X	X	○
-40 ~ +125	X	X	△

○: Available △:Conditional X: Not Available
Inclusive of calibration @ 25˚C ,operating temperature rrange,input Voltage variation,load variation,aging (1st year),shock,and vibration

Note: not all combination of options are available. Other specifications may be available upon request.

Specifications subject to change without notice.